PA10-134

HB5371

House	652-657	6
Housing	7-12, 64, 66-70, 80-81, 93-94, 96-103, 113-115, 116-120, 124, 133-143, 231-232, 240-253, 300-301, 303, 305	64
Senate	4121, 4126-4127	3
		73

H – 1075

CONNECTICUT
GENERAL ASSEMBLY
HOUSE

PROCEEDINGS
2010

VOL.53
PART 3
595 – 894

Total Number voting	149
Necessary for adoption	75
Those voting Yea	137
Those voting Nay	12
Those absent and not voting	2

SPEAKER DONOVAN:

The bill as amended is passed.

Will the Clerk please call Calendar 107.

THE CLERK:

On page 9, Calendar 107, substitute for House Bill Number 5371, AN ACT CONCERNING AFFORDABLE HOUSING REPLACEMENT, favorable report of the Committee on Housing.

SPEAKER DONOVAN:

The Chairman of the Committee on Housing, Representative Green, you have the floor, sir.

REP. GREEN (1st):

Thank you, Mr. Speaker.

Mr. Speaker, I move for acceptance of the joint committee's favorable report and passage of the bill.

SPEAKER DONOVAN:

Question is on acceptance of the joint committee's favorable report and passage of the bill. Will you remark?

REP. GREEN (1st):

Thank you, Mr. Speaker.

Mr. Speaker, this bill simply exempts the King Court housing project housing development in East Hartford from the requirement that they have to do a one-on-one replacement when they sell low or moderate income housing -- sell, transfer and/or destroy.

Again, I move my colleagues for passage of this bill.

SPEAKER DONOVAN:

Thank you, Representative.

Care to remark further?

Representative Genga.

REP. GENGA (10th):

Thank you, Mr. Speaker.

Mr. Speaker, I stand in support of this bill and would like to inform the assembly that this will help housing in East Hartford that has not been used for several years, housing that was developed in 1952.

There are 80 units near a college, Goodwin College. Fifty of these units are occupied; 30 of them are not. The monies are not there from the housing authority to generate the necessary repairs. By implementing this bill, the housing authority will

partner with the college and allow students and their families to live in these facilities with the same guideline, state moderate rental guidelines.

The college would rehab the facilities which are not being used right now, put them in shape and allow the maintenance to be continued through the housing authority. That's why I urge passage of this bill.

SPEAKER DONOVAN:

Thank you, Representative.

Representative Larry Miller.

REP. MILLER (122nd):

Thank you, Mr. Speaker.

I also rise in support of the bill. These units have been vacant for a number of years, do require an awful lot of maintenance and repair. And I think this bill will go a long way in straightening out a situation that's been long overdue. Thank you.

SPEAKER DONOVAN:

Thank you, Representative.

Would you care to remark further on the bill? Would you care to remark further?

Representative Bacchiochi.

REP. BACCHIOCHI (52nd):

Thank you, Mr. Speaker.

Through you, a question or two and the proponent of the bill, please.

SPEAKER DONOVAN:

Please proceed, madam.

REP. BACCHIOCHI (52nd):

Thank you, Mr. Speaker.

Am I correct in understanding that this bill is only two things, one of which would be to except East Hartford from the one-on-one replacement? And does it also changed the one-on-one to a one-to-two replacement? Through you, Mr. Speaker.

SPEAKER DONOVAN:

Representative Green.

REP. GREEN (1st):

Thank you, Mr. Speaker.

Mr. Speaker, just to be clear, this does not exempt the East Hartford Housing Authority from the one-on-one. This exempts this one unit development from it. So don't think of all of it. Just this one unit, and this does not call for a two-to-one, whatever is the agreement between the Housing Authority and whatever plan they have with it.

SPEAKER DONOVAN:

Representative Bacchiochi.

REP. BACCHIOCHI (52nd):

Thank you.

So only the one project in East Hartford is affected by the passage of this bill. It does not change the replacement for any other town or any other project in the state of Connecticut, only that one project in East Hartford. Through you, Mr. Speaker.

SPEAKER DONOVAN:

Representative Green.

REP. GREEN (1st):

That is correct. I just would like to -- my colleague to be aware of there's other projects that have previously had that, and I can't speak to their status. But in this one, it would just only affect, in East Hartford, that unit.

SPEAKER DONOVAN:

Representative Bacchiochi.

REP. BACCHIOCHI (52nd):

Thank you. Thank you, Mr. Speaker.

SPEAKER DONOVAN:

Would you care to remark further on the bill? Would you care to remark further on the bill? If not, staff and guests please come to the well of the House. Members take their seats. The machine will be open.

THE CLERK:

The House of Representatives is voting by roll call. Members to the chamber. The House is voting by roll call. Members to the chamber please.

(Deputy Speaker Orange in the Chair.)

DEPUTY SPEAKER ORANGE:

Have all members voted? Have all members voted? Please check the machine to be sure your vote has been properly cast. If all members have voted, the machine will be locked and the Clerk will take a tally. Will the Clerk please announce the tally.

THE CLERK:

House Bill 5371.

Total Number voting	148
Necessary for adoption	75
Those voting Yea	148
Those voting Nay	0
Those absent and not voting	3

DEPUTY SPEAKER ORANGE:

The bill passes.

Will the Clerk please call Calendar Number 202.

THE CLERK:

S – 610

CONNECTICUT
GENERAL ASSEMBLY
SENATE

PROCEEDINGS
2010

VOL. 53
PART 13
3842 – 4128

We are very efficient up here in the Senate.

SENATOR LOONEY:

Thank you.

Mr. President, moving to calendar page 32, Calendar 373, House Bill 5371, move to place the item on the consent calendar.

THE CHAIR:

Without objection, so ordered.

SENATOR LOONEY:

Thank you, Mr. President.

Calendar page 37, Calendar 529, House Bill 5398, move to place the item on the consent calendar.

THE CHAIR:

Without objection, so ordered.

SENATOR LOONEY:

Yes, thank you, Mr. President.

Mr. President, we have a -- if we might stand at ease for just a --

THE CHAIR:

Senator Looney, could you please repeat your last consent item?

SENATOR LOONEY:

That's consent calendar page 37, Calendar 529, House Bill 5398, Mr. President.

Calendar page 20, Calendar 556, House Bill 5498; Calendar 557, House Bill 5270; 559, House Bill 5407; 562, House Bill 5253; and House Bill -- Calendar 563, House Bill 5340; Calendar 567, House Bill 5371; and Calendar 573, House Bill 5371.

Mr. President, I believe that completes the items --

THE CHAIR:

Mr. Clerk, could you please give me on Calendar 567, do you have 5516, sir?

THE CLERK:

What -- what calendar?

THE CHAIR:

567 on page 22.

THE CLERK:

It's 5516.

THE CHAIR:

Yes, sir. Okay.

Machine's open.

THE CLERK:

An immediate roll call vote has been ordered in the Senate on the consent calendar. Will all Senators please return to the chamber. Immediate roll call has been ordered in the Senate on the consent calendar. Will all Senators please return to the chamber.

THE CHAIR:

Have all Senators voted? Please check your vote. The machine will be locked. The Clerk will call the tally.

THE CLERK:

Motion is on adoption of Consent Calendar Number 2.

Total number voting	35
Necessary for Adoption	18
Those voting Yea	35
Those voting Nay	0
Those absent and not voting	1

THE CHAIR:

Consent Calendar Number 2 passes.

Senator Looney.

SENATOR LOONEY:

Yes, Mr. President.

Mr. President -- Mr. President, before moving to adjourn, I would like to ensure the entire chamber will wish Laura Stefon, Senator McDonald's aide, my former intern, a happy birthday.

And with that -- and with that, Mr. President, I would move the Senate stand adjourn

JOINT
STANDING
COMMITTEE
HEARINGS

HOUSING
1 – 306

2010

CHAIRMEN: Senator Gomes
Representative Green

VICE CHAIRMEN: Senator Doyle
Representative Butler

MEMBERS PRESENT:
SENATORS: McKinney

REPRESENTATIVES: Miller, Lambert, Morris, Rowe, Taborsak, C. Wright

REP. BUTLER: Good afternoon.

I am going to convene to a public hearing for the Housing Committee scheduled for this Thursday, March 4th, 2010, and I'm going to first call upon our public officials, State Legislators, followed by state agencies, and, after that, we will be calling on people from the general public.

So without further delay, I will call on Deb Polun first to come up.

DEBRA POLUN: Good afternoon, Representative Butler and Representative Miller.

For the record, my name is Deb Polun. I'm the Legislative Director for the Connecticut Commission on Aging. And as you know, the Commission on Aging is a nonpartisan public policy and research agency that's part of the General Assembly.

HB5371

We're devoted to preparing our state for a burgeoning aging population. One statistic that you may know is that Connecticut is one of the oldest states in the country. We're about seventh oldest. What you may not know

is that our population is set to -- of people over the age of 65, is set to increase by 64 percent in the next 20 years.

I'm here today to testify in support of House Bill 5371, AN ACT CONCERNING ACCESSIBLE HOUSING, and I want to express the commission's appreciation for members of this committee who held a press conference in support of this bill earlier today. And as you can see, the room is filled with people who will tell their own personal stories of the importance of this bill.

So I'm just going to give you an overview of why this bill is good for individuals in our state and why this bill is good for our state and its budget.

So how does it help individuals? Well, we know from the long-term care needs assessment that was conducted by the UCONN Center on Aging a couple of years ago that about 80 percent of Connecticut residents would prefer to remain in their homes as they age.

And we also know from the same study that over 70 percent of respondents recognize that they might need some home modifications in order to stay in their homes as they age, such as wheel chair ramps and other modifications.

How does it help the state? We know also follow-up data from the needs assessment and other information tells us that in order to care for somebody in their home, it costs about half the amount of money that it costs the state to care for that same person in an institution.

So this is an example of a time, a very rare instance, where saving money actually provides

a better quality of life. Keeping people in their homes as they age allowing them to remain in their communities is a way that people can have a better quality of life. It's what they want, but it also -- very importantly at this time in our state's economic and fiscal climate -- it saves a lot of money for our state.

So why isn't this already happening? Unfortunately, it's because time and again studies have shown that the biggest barrier to remaining in the community is transportation. And the second biggest barrier to remaining in the community is housing. This is a huge obstacle for our state -- available, accessible, affordable housing for people to remain in the communities as they age.

What we're finding through the Money Follows the Person Program, which you may be familiar with, one of the components of that program is to transition people out of nursing homes and back into the community. And what we're finding is that housing is a major obstacle to transitioning people out of nursing homes, because typically, when somebody goes into a nursing home, they give up wherever it is that they're living.

So now we have over 300 people who have completed all of the processes involved for transitioning out of nursing homes. They're in nursing homes right now. They've gone through the whole Money Follows the Person application process. They've had the visitation and so forth.

And the only reason that they haven't transitioned for the -- by and large -- for the most part -- these 300 people -- is that they don't have a place to live. So they're

waiting right now for places to move back into in the community.

So this bill, 5371, would be one step in trying to make sure that there is accessible, appropriate housing for older adults and persons with disabilities in our state. It's a balanced approach. It's fiscally neutral -- very important right now -- and innovative.

And although it doesn't address existing housing stock, we do think it would be a way to move forward with our state and ensure that as we build new homes or modify homes, that this concept -- these concepts would be taken into account.

So thank you.

REP. BUTLER: Well, thank you for your testimony, and our Chairman, Representative Ken Green, is here, so I'll -- okay. I -- I just wanted to recognize that he's there, but I'm going to ask the committee if they have any questions. All right.

REP. MILLER: Thank you, Mr. Chairman.

I just have one question. What's the percentage of increase in elderly?

DEBRA POLUN: It's set to increase about 64 percent by the year 2030.

REP. MILLER: Sixty-four?

DEBRA POLUN: Yes, and we're already the seventh oldest state in the country. It's the median age. So it will have broad implications for government and businesses really across the board.

REP. MILLER: Are we worse than Vermont or --

DEBRA POLUN: You know what? I'm not sure where we stand demographically. I have a feeling we're in about the same place. But I can tell you that Vermont is a very progressive state when it comes to keeping people in their communities, and they have expressed a commitment to this throughout state government, and they are definitely a leader in the movement to allow people to age in their communities throughout their lives.

REP. MILLER: Their -- their senior population is growing by leaps and bounds.

DEBRA POLUN: Yes, it is.

REP. MILLER: And they have the lowest birth rate in the country.

Thank you very much.

DEBRA POLUN: Thank you.

REP. BUTLER: Thank you. And I'd like to also hear what you mustn't make, because I have a -- a large aging population in my district, but, more importantly, I was very interested in the association between our passing the Money Follows the Person Bill as it relates to this, because the dilemma that you spoke of is very much the case.

I know that there are some people who, when they leave their homes to enter, you know, medical facilities, that they do give up their homes, and so housing is very much an issue to follow up and take advantage of the Money Follows the Person, which not only, you know, solves a housing issue, but also will help the state save some money.

So thank you for actually sharing that with everyone here today.

DEBRA POLUN: And thank you.

REP. BUTLER: Are there any further questions?

Representative.

REP. MILLER: Just wanted to know if you submitted testimony. I have 5369, but I don't have 5372.

DEBRA POLUN: It's 5371. We did submit written testimony. It has --

REP. MILLER: 5372?

DEBRA POLUN: 5371, 5371, I think. Might be two. If you don't have a copy, I can make sure I get one for you.

REP. BUTLER: Okay. Thank you.

Next, we'll have Deborah Fuller.

Excuse me, could you turn on your microphone.

DEBORAH FULLER: Okay. I didn't know --

REP. BUTLER: Thank you.

DEBORAH FULLER: Sorry. Do you want me to start over?

Good afternoon Representative Butler and other members of the committee. My name is Deborah Fuller, and I'm here today to testify on House Bill 5369, AN ACT CONCERNING FORECLOSURE MEDIATION.

ALBERTA WITHERSPOON: We just had a new election. We just got a new slate of officers --

REP. MORRIS: Okay.

ALBERTA WITHERSPOON: -- which RAB boards used to be called "voices" --

REP. MORRIS: All right.

ALBERTA WITHERSPOON: -- and once this had some tax problems, some federal tax problems, so they had to eradicate voices, and they -- they formed RAB, resident advisory board.

REP. MORRIS: Thank you very much.

ALBERTA WITHERSPOON: You're welcome.

REP. BUTLER: Thank you for raising this point.

ALBERTA WITHERSPOON: Thank you.

REP. BUTLER: Next, we'll have David Fink, followed by Patricia Hoyer.

DAVID FINK: Representative Green, Senator Gomes, members of the committee.

I'm David Fink, Policy Director for the Partnership for Strong Communities. We are a statewide housing policy organization that advocates and educates for an end to homelessness and creation of affordable housing and development of strong, vibrant communities.

SB317
SB302
HB5371

I'm here today to just testify briefly on three different bills than you heard before. The first, Senate Bill 321, AN ACT CONCERNING THE STATE'S CONSOLIDATED PLAN FOR HOUSING AND COMMUNITY DEVELOPMENT, is designed, as we

We believe S.B. 302, which is now before the Planning and Development Committee, is a more expansive and powerful tool to accomplish that goal, but we nonetheless support S.B. 317.

Finally, we cannot support Raised Bill 5371, AN ACT CONCERNING A PILOT PROGRAM FOR AFFORDABLE HOUSING REPLACEMENT. Allowing a replacement ratio of one new unit for two units that were sold, demolished or otherwise made unavailable could severely deplete the stock of affordable units.

While the criterion used in the bill might be well-meaning, allowing the one to two ratio only in municipalities where more than 10 percent of the housing stock is considered affordable under the definition of 8, 8-30g, it's a bad criterion.

Imagine allowing two units to be destroyed for every one created in such cities as Hartford, New Haven, Bridgeport, New Britain, where the affordable units total more than 10 percent, but where the supply remains short. That would be a big mistake.

And I thank you for the chance to testify. I'm happy to answer any questions.

REP. BUTLER: Thank you.

Are there any questions?

Representative Green.

REP. GREEN: Thank you, Mr. Chair.

SB317

Just some brief comments on the -- the three different bills that you commented on. Let me start with the last one first on the -- the pilot program for affordable housing.

I -- I've seen some public housing units that have -- that had 30, 40, 50 percent vacancy rates, and for years the buildings have not been filled, vandalism, some have been burnt out, and -- and they're not occupied. They haven't been occupied for ten years.

If I wanted to redevelop those units, if -- if you're concerned about one to one replacement, what number am I looking at? And let's imagine it's a 100-unit building complex, 50 units have been vacant for ten years through whatever reasons. It's only 50 residents.

If I talk about one to one replacement, am I talking about replacing if I did something with the 100 units or if I just did something with the 50 units that are occupied?

DAVID FINK: I -- I see your point, and I -- I understand that. I think, you know, we have talked, Representative Green, as you know, often about a greater level of state investment in rehabbing a lot of those vacant units, and you know that our friends at the housing coalition and others have talked about the idea that there is an opportunity, whether it's general fund bonding -- I mean, geobonds, the (inaudible) amounts and cash credits, state housing trust fund. There are ways to rehab a lot of those units.

So I get your point that if -- that one to one may not necessarily -- you should strictly adhere to that if some of these units are beyond repair. So I -- I understand that. I guess we just wanted to make here today the general point that we believe in one to one replacement unless that would be totally unreasonable, because as you know probably better than anyone in the state, there's such

a severe shortage of housing units, and we just don't want a -- a legislative authority that could allow some of those units that could be rehabbed to be destroyed.

REP. GREEN: Okay. I guess I'm concerned that if -- if I've had 50 percent of the units that were vacant, in my opinion, they've been destroyed. In my opinion, we have taken off in this scenario our use of 100 units, we've taken 50 units offline that should have been used for affordable housing that hasn't been used for years.

And so if I were to move to create new housing, should I, even if I wanted to deal with the 50 units, should I be strict on replacing those 50 units, or should I at least try to get, say, maybe 25 of those units more affordable and maybe rehab a unit and/or look at the communities to say if you can demonstrate affordability in other parts of that municipality, why not maybe be able to institute or initiate some kind of development on those 50 vacant units.

So I guess I'm trying to -- trying to decide when I hear, for a number of years, Hartford, New Britain, New London, East Hartford, the town says the units are vacant, which I'm not sure how they got vacant, I'm not sure where people are living, so when people say, and I agree, we have a shortage of housing and affordable housing, but I got 50 units that have been vacant for years, and that cannot help and beautify a community.

And I want -- I want to make some changes and some positive changes. I want to create some affordable housing. Do I continue to let them be vacant, or do I try to be creative possibly with some arrangement on seeing if there's --

we can fill it -- some housing units as affordable but maybe not meet that -- that standard?

Do you -- do you think that that would severely limit the opportunity for us to afford people some housing opportunity? I mean, I got 50 units offline, maybe I could have 25 online.

DAVID FINK: Well, I -- I think you're absolutely right that we have to be creative, and I -- I understand the need for flexibility. I -- I don't know what kind of language. I guess we could sit and talk about the language that would allow a reasonable solution, you know, determined by the commissioner of DECD or whoever was an issue or, you know, or had authority there.

But I -- I see where you're going with it, and -- and we don't ever mean to stay the hard and fast rule, but we do live by the principle that we can't be getting rid of units that we sorely need. But I -- I see where you're coming from, and I --

REP. GREEN: And I -- I agree with you, and I -- I don't -- I don't want this to be where folks can just start putting people out so that they don't have to replace units, except that I'm looking at more of somehow these units are vacant, and somehow I'm not particularly sure where folks went -- went, and -- and I agree that the -- there's a lack of affordable housing for -- for our citizens.

But I also see communities with developments that are 50 percent vacant, and it's an eyesore, and it's a danger, and it's -- and it can't help with the property values, and there

needs to be some movement there, and so I think we'd have to look at that.

On the Senate Bill 317, which you support, Planning and Development has sent a Bill 302. Can you maybe just quickly tell me what might be one or two of the differences that, again, and at some point there's -- these two might merge, but that bill is more expansive and powerful --

DAVID FINK: Right. Well, I don't -- I don't --

REP. GREEN: -- but what might be one or two of the differences?

DAVID FINK: -- have them both in front me now, but I, as I recall, 302 sets out that the -- the commissioner of economic and community development is empowered to determine that development in the flood plain would not damage environmental quality or flood control efforts or otherwise threaten public health and safety. It's just a bit more expansive in -- in it's language. So -- but -- but both ideas are fine, and it's a good way to take -- make use of existing density and existing structures.

REP. GREEN: Okay. And on the other bill of the long-range, Senate Bill 321, the State's Consolidated Plan for Housing Community Development, and being a -- involved with all of these things, I think, do a lot of very good and positive work around housing, especially around information and research.

Do you find the reports from DECD about long-range paying and around housing -- the housing development -- to be useful? Do they tend to be outdated, and I -- I would like to make sure the state agency is really responding, I

commissioner can have, yet despite her amazing progress, and if I might add in the face of formidable obstacles, within only a few months of acquiring the position, she is now in danger of having her term cut short next October due to the unfairness of the current system.

The adoption of Senate Bill 320 would constitute a quantum leap in readdressing the lack of tenant commissioners who serve as true voices for their charges -- while additionally I propose you consider mandating a minimum of two tenant commissioners per every housing board -- and I believe your support of this bill would improve not only the lot of public housing residents, but the management of public housing properties statewide.

Thank you for allowing me this opportunity to speak my heart to you today. God bless you all.

REP. BUTLER: Are there any questions?

Thank you.

DORIAN KREINDLER: Thank you.

REP. BUTLER: And forgive me for the pronunciation of your name, as those who follow. Please forgive me.

Raphael Podolsky.

RAPHAEL PODOLSKY: Thank you very much.

I'm Raphael Podolsky. I'm a lawyer with the Legal Assistance Research Center in Hartford, part of the legal aid programs. I've submitted written testimony on six bills. I'm really going to spend my time speaking about

HB5371 SB320
HB5369 HB5370
HB5373 SB319

one of them, but I want to quickly identify the other five.

We oppose House Bill 5371, which is the DEMOLITION OF PUBLIC HOUSING WITHOUT FULL REPLACEMENT. We support two bills with amendments that I believe that the sponsors are offering to you: Senate Bill 319, which deals with an urban home setting pilot program, Senate Bill 320, which is the SELECTION OF TENANT HOUSING AUTHORITY COMMISSIONERS.

We support two other bills: House Bill 5369, which is on foreclosure mediation, and House Bill 5370, which is on the rehabilitation of Westbrook Village and Bowles Park in Hartford.

The bill that I want to talk about, though, is a bill we very strongly oppose, which is House Bill Number 5373, which deals with the issue of residency and tenancy. And we oppose it because it addresses an issue that has to be addressed delicately with an effort to make an absolute bright line rule, which I think is not going to work.

The particular draft of the bill that you have doesn't work for other reasons. And that is because at heart, it takes -- it's trying to deal with issues about when there's a guest within a tenant's apartment, sort of have tenant status, but what it does is it actually deals with landlord/tenant law, between the landlord and the tenant, makes up rules that I think don't work in any event, but even if they worked, they -- they're not appropriate when applied to landlords versus tenants.

People who are -- they're -- they're meant to deal with people living in the same house.

RAPHAEL PODOLSKY: Yes. Yes. I mean, I think that's -- when you -- when the legislature does pilot projects or demonstration projects, presumably the reason for doing it on that basis is because you expect to learn something from it and figure out where to go from there, and -- and so -- and specifically pilots need to be fairly discrete and -- so that you can actually look at how they work.

REP. BUTLER: Okay. Well, thank you.

Are there any other questions? All right.

Thank you for your testimony.

RAPHAEL PODOLSKY: Thank you very much.

REP. BUTLER: Next, we have Jeffrey Freiser, followed by Mary-Ann Langton.

JEFFREY FREISER: Thank you, (inaudible) Chairman, (inaudible), Chairman Green, members of the committee.

My name is Jeffrey Freiser. I am Executive Director of the Connecticut Housing Coalition. I'll quickly testify on several bills before you, and I've submitted more detailed written testimony.

First, we offer our strong support of S.B. 320 CONCERNING THE ELECTION OF TENANT COMMISSIONERS. As you've heard already, all across Connecticut, there are residents of public housing who are actively involved in making their communities better places to live. They care deeply. They work hard trying to improve the conditions of public housing, and this bill will give them the right to elect tenant commissioners under particular circumstances.

HB5397
HB5371
SB318

We also support strongly House Bill 5397 CONCERNING REAL ESTATE LICENSING FOR NONPROFIT HOUSING CORPORATIONS. Under Connecticut's real estate licensing law, you do not need a real estate license to rent apartments in a building that you own. But, if you are performing that service for another person or entity, licensing is required.

The law becomes ambiguous when you apply it to nonprofits that develop housing under the Federal Low Income Housing Tax Credit Program. Essentially, these are housing developments that are part of that portfolio. They are the sponsors. They manage the housing, but they have to create a limited partnership to the -- the ownership entity in order to provide a tax benefit for the investors under the requirements of the federal program.

So in every way, they are managing their own buildings. They should be exempt. In fact, we are trying to seek an opinion from the Real Estate Commission so that we have an administrative remedy, but in absence of that, the bill before you would provide a very narrow exemption to the licensing law covering this particular situation.

We strongly oppose 5371, which has already been discussed, a pilot program for affordable housing replacement, which would allow demolition of 50 percent of public housing stock in up to 31 municipalities, including our largest cities, and that represents the large majority of our public housing. It would gut Section 8-64a, which requires the DECD commission to conduct a careful review and assure that specific standards are met before approving sale of public housing.

HUD rules provide that a resident organization shall have its governing board chosen by election. These elections take place -- (inaudible) voters can run them, the public housing resident network has run them, and we're asking that this same kind of election procedure be made available for electing tenant commissioners.

And then last, questions on the replacements bill. It was asked whether one for one is a reasonable standard. In fact, we used to have an absolute one for one standard in law that has been repealed many years ago, but I urge you to maintain that as our goal.

HB5371

The commissioner of DECD gets to review various circumstances in each housing development proposal for revitalization and make a determination, but in Stamford, for example, there's a local ordinance requiring one for one, and the Stamford Housing Authority has been a leader in doing effective, beautiful revitalizations of public housing.

The exemptions that Representative Morris was looking at are not in the bill itself, but in current statute. I mean, they were reprinted as part of the bill, but those various Hope VI initiatives were -- were previously authorized as -- as exceptions to the statute, and if we have to, then we go back and make exceptions on a case by case basis, but I would urge you not to -- to suddenly allow the demolition of half of our public stock in 31 municipalities who represent the vast majority of -- of our public housing.

Thank you.

REP. BUTLER: Are there any questions?

Representative Green.

REP. GREEN: Thank you, Mr. Chair.

A couple of questions, you know, we'll -- we'll talk some more, but let me just ask a question on Bill Number 318.

JEFFREY FREISER: Uh-huh.

REP. GREEN: You suggested that we not include Section 5, and one of the reasons I think I heard you say, was that because we should not in these tough financial times possibly encourage funding for private developers.

It's -- it's tough enough for nonprofits to get somebody predevelopment funds. Isn't -- isn't their relationship now with private developers and private entities and public/private relationships that we give public monies to, to do housing development?

JEFFREY FREISER: Oh, and current statute would allow that. Partnerships between a for-profit and nonprofit are allowed, but we should not -- but it is a limited pot of money and already oversubscribed, so I would urge you not to deal with that further.

There's -- the nonprofits that are -- are the ones doing housing that serve the lowest income households with the greatest needs and the most difficult settings I think need to be our first line in delivering affordable housing, and they're -- they're in a period where they're -- they're fighting for their survival.

So take one of the few resources they have in this program and say we're going to open up to

for-profit bill with this as well, I -- I think is terrible public policy.

REP. GREEN: I might agree that our public policy around housing has not always been, I think, great, but at the same time, for example, I noticed and am aware of one of the recent housing developments that we did where the old Civic Center down in Hartford was, the 21 north or 21 building is a housing development at this old Civic Center, and that receives state funding for some kind of -- part of it's development.

JEFFREY FREISER: Uh-huh.

REP. GREEN: And so here's a private developer who has built on a 21-story, non -- in my opinion -- nonaffordable units, and we gave state assistance to, so public policy is one thing, but if I want affordable housing, my public policy and the kinds of funding, I think, has to be more -- has to be clearer and directive about what I believe is affordable housing.

And so when we look at information about, you know, how much a person has to earn to live in certain communities, then we can determine some affordability here.

So -- so I don't know if we've had a clear policy on it, and so it's -- it -- even in public/private partnerships, a lot of times, even if we talk about low income tax credits and other kind of tax credits, a lot of times the nonprofit don't benefit from that. Private entities benefit from that.

JEFFREY FREISER: Uh-huh.

REP. GREEN: So -- so a lot of our policies assist private developers --

JEFFREY FREISER: Uh-huh.

REP. GREEN: -- and they make money. So in this section here, it seems to me that we're saying if there's some predevelopment costs and someone wants to build some housing, and we can tie in some affordability, why not do that?

JEFFREY FREISER: Well, I'm certainly always eager to incentivize private developers who do affordable housing. In some cases, I think the state has -- has made good investments, and sometimes I think there have been bad investments with private for-profit developers.

With respect to this very particular program, there's no new bonding going into the predevelopment program, and it's only the repayment to that program, so it is a very limited pot of money that already exists dedicated to nonprofits, municipal developers and housing authorities.

Those three entities are doing, I think, the best affordable housing in the state and have very desperate needs, so I'm just urging you not to pick their pockets to create a new incentive for for-profit developers.

If you want to talk about how we can incentivize the for-profit community, let's have that conversation, but don't take cash resources from those other developers who -- who really are, I think, doing our best work on the front lines.

REP. GREEN: You mentioned Stamford and -- and now if we talk about the one on one replacement. A couple points. One was that we really don't have a strict -- we don't have strict language by statute that says you have to have a one to one replacement. Is that correct? Did I hear you say that?

JEFFREY FREISER: Yes.

REP. GREEN: Okay. So that if a municipality or a housing authority were to try to oppose DECD or a state agency to say we want to do this, and it's not a one to one replacement, it's possible that DECD could waive -- not even waive -- it's not in the statute, so they could decide to allow that to happen.

JEFFREY FREISER: Well, they have to, though, make a finding that has very high standards, including an adequate supply of affordable housing in the municipality. So we certainly don't encourage DECD to make that kind of finding lightly.

And the legislature has, in fact, done special acts instead to authorize revitalizations in particular cases -- Westbrook Bowles in New Britain, I think, is the latest example that I can recall. I'm sorry -- Corbin Heights --

REP. GREEN: Corbin Heights, yes, networks -- but I don't think we decided.

JEFFREY FREISER: -- was the example. Yes.

REP. GREEN: So -- so I know since I've been here in -- in (inaudible) and in housing we have made some exceptions to the 101 --

JEFFREY FREISER: Uh-huh.

REP. GREEN: -- concept through legislation, so we, in fact, have done it, and then we found reasons to do it. Would you suggest that we do it strictly on a case by case basis through legislation?

JEFFREY FREISER: I mean, we -- we, you know, we should try -- we've actually tried to rewrite (inaudible) statute 64-a before in years past, and I welcome an effort to -- to have a comprehensive look at that, but to simply open the floodgates and say that we can have one for two replacement, that we would allow one half of our public housing stock to be lost in 31 communities that are identified through the 8-30g process, those communities represent more than three-quarters of our assisted housing in this state. I -- I think that's just a -- a devastating option, and -- and we shouldn't go there. We shouldn't go there.

REP. GREEN: Yes. Could that -- could that, however, might have a consequence of, in a sense, encouraging or forcing other communities to accept some affordable -- to -- to make units more affordable in other communities if -- if there's -- if there's the sense that some communities already have that and don't -- don't have to do that?

JEFFREY FREISER: Okay.

REP. GREEN: Could that -- you know, if -- if I were 10 percent and I have met the affordable housing 10 percent --

JEFFREY FREISER: Uh-huh.

REP. GREEN: -- and now there are some benefits to maybe doing it two to one, would that maybe open up some other communities to offer some

affordable housing so that we can move folks in those communities?

JEFFREY FREISER: No. If a community is under the 10 percent --

REP. GREEN: Right.

JEFFREY FREISER: -- certainly they would be, you know, falling further behind. I think we're -- we're actually seeing real progress by providing moratoria for communities that make incremental progress still below the 10 percent. We are providing moratoriums.

We have seen communities that actually now are embracing affordable housing because they want to renew those moratoria. We have programs like HOMEConnecticut. You know, we're encouraging other communities that -- to do more, and we should keep doing that, but I don't see this bill is helping us in that cause.

REP. GREEN: You -- you mentioned Stamford as a -- a town that I think has it's own one on one replacement --

JEFFREY FREISER: Uh-huh.

REP. GREEN: -- and just from information that I received, Stamford seems to have one of the highest rates of -- of costs around housing units, and I'm not sure if they met the affordable housing 10 percent.

They probably have, because it's a city, but actually some of the anecdotal feedback I'm getting is that it's continuing to be more and more locking out affordable units, and it just happened to be Stamford.

So, again, I would have to figure out how -- how that's working in terms of keeping units low and -- and affordable in that town through the one on one replacement, because that's been one of the criticisms that I -- I just happened to hear about -- Stamford and some of the direction it's going with the cost of housing in that -- that area.

JEFFREY FREISER: Yes. I mean, that housing authority has been very entrepreneurial. They've been very creative in patching together local, state and federal funds, and all those financing programs all have income restrictions with them, so those are affordable units that they're putting up to replace housing that -- public housing that comes down.

REP. GREEN: Okay. Thank you.

REP. BUTLER: Any other questions?

All right. Thank you.

JEFFREY FREISER: Thank you.

REP. BUTLER: Next, we have Mary-Ann Langton, followed by Kevin Nelson.

MARY-ANN LANGTON: Hello Senator Gomes, Representative Green and the Housing Committee.

HB5372

TRANSLATOR: Hello Senator Gomes, Representative Green and the Housing Committee.

MARY-ANN LANGTON: My name is Mary-Ann Langton.

TRANSLATOR: My name is Mary-Ann Langton.

And -- and I, you know, I can really sympathize with the desire to be able to handle it without having to go into court and without having to bring in lawyers, and I think that, you know, with more training, police officers will be able to -- to make those judgments more consistently, but I think it's really important to realize that they're nuance judgments.

It's not -- I mean, it's -- there's just no way, because life is so complicated. It's just not simple, and everybody's situations have -- have, you know, wrinkles to them that you -- you can't -- there's -- there's just not going to be an easy way -- you know, an on/off switch for something like this. It -- it will take training and time.

REP. BUTLER: All right. Well, thank you, and thanks to your testimony and those earlier. It's just helping everybody to understand this a lot better. Thank you.

SALLY ZANGER: Thank you.

REP. BUTLER: Okay. Is Neil Griffin here?

NEIL GRIFFIN: Good afternoon, Chairman Green, members of the Housing Committee.

My name is Neil Griffin. I'm the Vice President of Housing and Legislation for Connecticut-NAHRO, and I'm the Executive Director of the Glastonbury Housing Authority.

I'm here speaking on behalf of Conn-NAHRO's Executive Board and the member agencies. I'd like to express our support for Senate Bill 317, House Bill 5371, and our opposition to Senate Bill 318, House Bill 373, and Senate Bill 320.

HB5373
SB302

Conn-NAHRO would like to thank the Housing Committee's effort to preserve the affordable housing and low-income housing that's been previously developed in the 500-year flood plain. Senate Bill 317 will allow an opportunity to access not only state funds, but federal funds administered by the state as well in several communities throughout the state, including Bridgeport, Ansonia, Hartford, Stamford and Glastonbury. All have properties that exist in this flood plain. There's several others as well.

As mentioned before, (inaudible) think -- we think some of the language in Senate Bill 302, particularly the language that allows the exemption to any unit on the most current affordable housing appeals list, opens up the possibility to a larger spectrum of affordable and low-income housing, not only the state housing portfolio. So we'd urge the committee to look at that language as well.

And we find the language on lines 122 through 124, which mentions "provided such units were built in compliance with the flood map at the time of construction" could create some confusion, since at the time of construction, most of these units in the 500-year flood plain wasn't much of a concern to anybody in the early seventies, fifties and sixties.

In light of the fact that a building permit was issued and the local zoning was looked at when they were constructed in the past act, we would suggest you look at that language, and we would urge you to consider removing it.

As for the House Bill 5371, we -- we believe it provides an opportunity to evaluate the redevelopment of various properties to

determine if the two for one replacement plan has merit. At a time when there's -- required to leverage many sources of financing, there's a clear need to lessen the subsidy demand.

We think the concept in 5371 is worthy of pursuit. It can open up the opportunity for mixed income where you may be -- be able to put 50 percent of the units back in as low income and affordable and maybe mix in some affordable or market rate or homeownership opportunities to help finance the property. At a minimum, it would certainly be worth some further evaluation.

Senate Bill 320, we -- we speak in opposition of. We believe that the Connecticut General Statutes provides a mechanism to allow recommendations to be submitted by the tenant commissioners now and requires the municipality to review those submissions in their determination for a tenant commissioner.

We believe the -- removing the appointment from the ultimate oversight agency, which is the chief elected official, removes the core principal of accountability to the person that has the cognizance of oversight of that commission.

And there is a little bit of a concern of the unfunded mandate of holding -- the cost of holding an election. Would that be borne by the municipality or by the housing authority? Those are our concerns with Senate Bill 320.

Senate Bill 318 -- we would like to see some language that would place the Housing Committee as the Oversight Committee in conjunction with some appointed housing practitioners keeping in the spirit of the existing statute.

And finally on -- I believe the last one I missed was House Bill 5373. We believe that the bill as written was for a well-intended purpose, but without some serious changes to the summary process statute, this bill would propose some complications to the current eviction proceedings for an unauthorized occupant.

We have submitted written testimony with some more specific information for you, and if you have any questions --

REP. BUTLER: Any questions?

Representative Morris.

REP. MORRIS: Yes. Thank you, Mr. Chairman.

In -- in regard to H.B. 5371, and the latter part of your testimony -- the last paragraph of your testimony, which recognizes the loss of low-income or moderate-income housing units, in -- in reckoning -- how do you -- how do you counter that -- recognizing that and -- and what appears to be like it's -- my sense is like it -- it just can't happen in -- in context with Mr. Freiser's comments, which specifically site a city like Stamford which has done it very well.

NEIL GRIFFIN: And similar to Chairman Green's statements earlier, we believe that there are certain situations where the units have remained vacant. The financing isn't there to rehabilitate the property as an entire low-income property, which results in basically a de facto demolition of several units, because they're remaining unoccupied from being fixed.

We see there's an opportunity to look at it and evaluate it -- you know, reality speaks. I mean, housing managers -- there's an economy and scale in having more units to -- for one to step forward and say we want to reduce our inventory -- only happens after a careful evaluation that they can't make it go forward with 100 percent of the units existing.

So we see it as an opportunity to prevent this flat-out -- well, as we stated, there's not a flat-out prohibition, but I'm not aware of any time the commissioner of DECD is allowed for a less than one for one replacement. I could be mistaken, at least not in my recent memory. I know it's been legislated, and an evaluation has been done to say, yes, this -- this does have merit.

And that's what we look at that as this bill doing. Is it providing an opportunity for properties where a less than one for one replacement that has some merit in doing it that way -- the evaluated?

REP. MORRIS: The -- the National Association of Housing Redevelopment officials, when it -- it takes a policy or -- or a position --

NEIL GRIFFIN: Uh-huh.

REP. MORRIS: -- how does it evaluate that position for redevelopment in terms of the state's challenges with transportation or overall economic development and the need to make certain that people of all different income levels are -- have, you know, close proximity, you know, to where -- to where they're working? What -- what's it's overall process?

NEIL GRIFFIN: We view that as being critically important, because the population we serve --

obviously, a good portion of it -- relies on public transportation to be able to get to and from their employment opportunities.

REP. MORRIS: Uh-huh.

NEIL GRIFFIN: We think there's probably some room for improvement in the state's housing policy for development to ensure that there is accessible transportation. I think if you look at most of the nonrural developments, you'll find that they are probably fairly close to transportation centers or transportation lines.

I can speak specifically to the case in the authority -- the properties we manage in Glastonbury, they're all on one of the public transportation routes, and we see that as, you know, we couldn't develop or wouldn't seek the development of a property that would be off the public transportation routes. It really wouldn't lend itself to smart growth is -- I guess you could put it.

REP. MORRIS: Does the Association see the means that the City of Stamford used as a viable model that other cities should possibly adopt?

NEIL GRIFFIN: I think the City of Stamford has done a tremendous job in being very creative in their financing solutions to put together redevelopment. I think anyone that doesn't look at the model supported by Stamford and try to find some way they could apply it, it probably isn't doing a thorough job. It's a -- they've done an excellent job in Stamford.

REP. MORRIS: Do you think that model is a better one than the one that's being proposed in this bill?

NEIL GRIFFIN: I don't think they're necessarily mutually exclusive or one as opposed to the other. I think, in taking pieces from each one, it can help you come up -- it gives you more options and more opportunity. You have to evaluate each one and find the best solution for the property that you're working on. So I don't think necessarily one model would outweigh the other.

REP. MORRIS: What would be the negative factors in your mind to the Stamford model?

NEIL GRIFFIN: It lends itself to larger organizations and not the very small housing authorities and rural housing authorities who are very small nonprofits. They're a very skilled organization with a large number of highly professional staff. It would probably require some outside consultation for smaller property managers to achieve the same result that Stamford has.

REP. MORRIS: Let's say -- okay, so then if it lends itself to the larger ones, and if I understand it, so correct me if I'm wrong, this bill that is being proposed already lends itself to the larger (inaudible) --

NEIL GRIFFIN: There -- there's very few that are as large as Stamford. I would say Bridgeport, New Haven, Hartford, Danbury, but there's -- you're talking about 31 communities, and there's probably only five that would have an agency as large as them, maybe six or seven.

REP. MORRIS: So are you saying that out of the 31, only five -- are you saying another -- the other --

NEIL GRIFFIN: I would --

REP. MORRIS: -- 26, whatever, are not large enough that this would -- that a Stamford model would work from. I'm trying to -- you know, you do redevelopment, so I'm trying to get a good sense from you --

NEIL GRIFFIN: Well, I think they're pioneering in a sense a -- a new way to go, and they're probably one of the lead agencies that have gone forward with this new model that others should look at. But many of the other communities that are impacted that are in those 31 communities are managing -- would be much smaller authorities or much smaller nonprofits, I would say. They're probably not in the thousands of units category. They're probably in the several hundred unit category.

REP. MORRIS: And I guess the challenges -- I'm going to look at the second paragraph of your testimony which pretty much acknowledges, you know, that the loss of these low-income or moderate-income houses is --

NEIL GRIFFIN: Well, we -- we definitely advocate for the preservation of housing so that anytime that I would -- a member agency would be posing a reduction, it would have only been after serious consideration that there is no feasible financial model then to go forward with a one for one replacement.

REP. MORRIS: Okay. All right. Thank you very much.

NEIL GRIFFIN: Okay.

REP. BUTLER: Are there any other questions?

Thank you very much.

So the idea here is not that there's -- and I'm -- I'm responding to what I saw as some questions about particular commissioners in particular cities. The concept is that the system needs to be one that gives residents much more of a voice and the feeling that they have a stake in their community -- much more franchise.

The other quick thing that I want to do is respond to --

REP. BUTLER: Final thoughts, please --

KIM MCLAUGHLIN: Yes. This is it.

REP. BUTLER: -- because it's getting too -- a little late --

KIM MCLAUGHLIN: And this has to do with --

REP. BUTLER: -- and we have a lot of people to testify, please.

KIM MCLAUGHLIN: -- House Bill 5371. It's just information for your -- with respect to House Bill 5371, my understanding is that there has -- there have definitely been some flexibility in that law in the city of Stamford, in particular with respect to Saint John's Towers.

So it's not as if one for one replacement doesn't -- doesn't meet -- you know, that there -- there can't be some flexibility in the system, but the -- the protections are very important.

So thank you.

REP. BUTLER: Thank you.

Is there any question?

REP. BUTLER: Are there any questions?

Thank you.

ELIZABETH BESSETTE: All right. Thank you.

AMY EPPLER-EPSTEIN: Hello. My name is Amy Eppler-Epstein. I'm an attorney at New Haven Legal Assistance, and thank you -- welcome -- members of the committee.

I am here today in opposition to House Bill 5371, THE ACT CONCERNING A PILOT PROGRAM FOR AFFORDABLE HOUSING REPLACEMENT, or, as I would call it, the act that's allowing -- would allow housing authorities to destroy and not replace half of our very valuable public housing stock.

I've worked at New Haven Legal Assistance for more years than you want to know -- more than two decades -- representing tenants, and I can tell you how important our public housing stock is. This is where very poor people, people with disabilities, go because it's the only place they can afford. Without this kind of public housing, many of them would be homeless and on -- living on the street.

And I took the time to come up here this afternoon because I was very frightened to read this bill and think of the possibility that housing authorities would be allowed to tear down those public housing brick to mortars building and replace only half of them. It's just too important and valuable a resource to the state to allow housing authorities to -- to demolish half of these units and not replace them.

I have actually -- I've submitted written testimony to you, and I -- and I wanted to tell you, I've actually represented three tenants associations and three different projects which have been slated for demolition.

And in some of those, it's been for really good reasons. They want to tear them down and build better housing stock and through the 8-64a process and the negotiation process, we've been able to negotiate with the housing authority and try to maximize the amount of replacement housing there.

I would tell you from experience that DECD is flexible. It's not always one for one. When we've come up with a plan that maximizes the replacement housing, sometimes maybe allow some vouchers and other things offsite, tenants have been happy with it and approved it and -- and, you know, have supported it.

DECD has approved those projects, but if we -- I've -- I've seen other -- I'm currently involved in another community where the housing authority -- where the reason for the proposed demolition is because they want to drive poor people out of town.

They want to demolish that place and pretty much have no question that they're not looking to have the low income people who live there stay in that community at all and to give them the green light and the go ahead to say, "You can tear them down and you don't even have to try to replace more than half of them" is just going to lose an incredibly valuable housing stock.

If only this law -- I mean, I have some concerns with 8-64a the way it is right now.

It's, in some ways I think, makes it a little too easy for housing authorities to tear down and just give people replacement vouchers and not have anything in that town. But if you were to pass this bill, it would just be even -- even worse and stronger to get rid of the things and -- and throw everybody out.

So I'd be happy to answer any questions. You have my written testimony as well. But I -- I can't urge you more strongly to please oppose this House Bill 5371. It's not a -- it's not an experiment we can afford to do.

As I'm sure you're very well aware, there's not enough -- you know, the state has been working so hard to increase the supply of affordable housing and to have -- put money into innovative programs to -- because we know how important it is. We know how expensive it is to live in Connecticut and for poor people especially. And -- and we just can't afford to lose that stock without fight.

And -- and what I've seen is, you know, if the housing authorities, if they're required to comply with this law and they have to do it, they have to go through the DECD process, they're going to do the work to try to -- to see what they can come up with.

You know, we talked earlier about Stamford and the work that they've done. It can be done if you require them to do it. But if you don't require them to, it's not going to happen. And if you do require them to, they can also go to HUD and say I need replacement vouchers. I need this more money. But without that requirement, it's just not going to happen.

REP. BUTLER: Thank you.

Any questions?

Representative Green.

REP. GREEN: Thank you.

Have you ever done any -- I don't know, it doesn't have to be scientific, but unscientific research on if people who live in units, and 10, 20, 30 percent of the units are vacant, the -- the crime situation may be there, their -- their visual of seeing their neighborhood, their status of their neighborhoods are terrible. The -- the units are vacant.

AMY EPPLER-EPSTEIN: Uh-huh.

REP. GREEN: There's 10, 20, 30 percent vacancy in those units. Do you think that's an impact on the quality of life of those individuals who are still there?

AMY EPPLER-EPSTEIN: It certainly can be. It certainly can be. You know, and it's a waste too, I mean, certainly having those units out there and not having them rented. I -- I guess I've seen both. I've seen some cases where the particular building I'm working in right now, a lot of those units have been vacant for a long time and the housing authority hasn't wanted to put the money into fixing it up.

It's a high-rise building. I don't think that's had a particular impact, and it's also an apartment building where it's not so visible. Other places where it's spread out and you see boarded up building after boarded up building and, you know, there's the fear of people coming in and breaking in and vandalizing it and using it for bad purposes.

Certainly, in that kind of case, there could be more of a problem.

So, yes, I -- I don't disagree with you that that can be a problem. I actually have to say, and this has sort of been a -- a -- an issue, but I think DECD, when there's units that have been vacant for a long time, DECD is not even counting those units in many cases as to what the housing authority has to replace.

If they've been so, you know, it's such bad shape that they haven't been occupied, I don't even think they're being taken into account as what has to be replaced. So I don't think that by itself is a barrier to the -- to the redevelopment. Am I -- am I responding to your question? Is that making sense to you?

REP. GREEN: Well, the last part about DECD not taking into account those units, I -- I guess I'm going to want to get some clarification on that in terms of counting the units, because, yes, that -- that would be a critical piece to me, and I was going to ask you if they had been vacant for so long, right -- are they being counted, and, you know, and -- and let's -- let's imagine I have -- I have a development with 100 units.

AMY EPPLER-EPSTEIN: Uh-huh.

REP. GREEN: I'd have 30 of those units that are vacant.

AMY EPPLER-EPSTEIN: Uh-huh.

REP. GREEN: And it seems to me, if they're offline --

AMY EPPLER-EPSTEIN: Uh-huh.

REP. GREEN: -- that the law would encourage that we'd have to replace them. We -- if -- if they're offline, 30 units, I have now gotten rid of 30 affordable units. The law says you have to replace those 30 lost units, it seems to me.

So why -- why wouldn't we come to this data? Why wouldn't somebody come and say and say, "Hey guys. There's a one for one replacement. If you're going to shut them down, 30 units, and not occupy them, you've lost 30 units. Where have you replaced them at?"

AMY EPPLER-EPSTEIN: No. Let -- let me --

REP. GREEN: So -- so I guess I'm trying to get clear, because I guess I'm trying to get to the point of well, how did we lose 30 units and not replace them, and then the argument is well, 30 units have been lost for so long and now the community is saying, "Do something with them," and people are saying, "Well, you've got to do one on one." "Well, wait a minute. I've had 30 units vacant for ten years."

AMY EPPLER-EPSTEIN: And I can't tell you for sure what -- how DECD is interpreting that. What I can tell you is that the tenants -- the groups that I've been working with, we sort of have two goals, which -- which are -- can be in conflict of their -- their -- you know, you have to push for both of them.

The tenants -- if -- if the housing authority wants to replace -- to do demolition and to do replacement, the tenants all the time want that to happen, because they want to live in a better place. They want rehab. They also want the maximum amount of replacement that they can possibly get because they're

conscious not only of the people living there now, but all the people on the waiting list and the people who need it. Right?

But they don't want to push for something that's going to be so impossible to obtain that they're not going to get anything. Right? I mean, that's -- that's the real problem that we're trying to deal with. From what I have seen, DECD is conscious of that issue and also doesn't want to stop something that's going to go to the maximum point that it can -- that's going to yield the maximum result of replacement housing.

But if you lower that bar, if you say, "You don't even have to try to replace 100 percent of what was there, you don't even have to try. You only have to do 50 percent." That's going to just go right down the tubes.

Whereas right now, I think as a practical matter, as a flexible thing, DECD is going to look at that, they're going to be flexible, they're going to say, "You know, are you replacing the -- maybe there's 75 occupied units here and 30 vacant, but are you using the same floor space," because there's -- there's some leniency in there.

Let's say you have efficiency apartments and you're expanding them into two bedrooms and you don't need the same number. You need the same floor space. So they have some room to -- to work with the space. So I just think that you can't lower the bar of what you're expecting them and what you're trying to get them to do.

REP. GREEN: Well, I -- I don't know if I heard -- I -- I thought I heard earlier, and I'm trying to recall that most of the weight or waivers

or exceptions to the 101 has been through statutory language for certain projects and that people could not recall DECD ever, and I -- I can't recall in -- in my years here, of when DECD made the decision of not a one to one replacement, that is, to either come through legislation by specific statute.

AMY EPPLER-EPSTEIN: Well, one of the things, I mean, one of the issues is can they -- do they have to replace units right there on site or can they allow them to give vouchers? And so I have one -- one place that we represented where we -- where they -- I -- I -- first of all, you know, I think it's important to not lose the bricks and mortar units, but maybe they're housing authority is looking to do mixed income and so some of the actual units there would be replaced, but not for lowest income people.

And then the housing authority has been pushed because of the statute, and DECD has approved to say, "Well, you can give some of those people vouchers that they could use offsite." That might be an example that I'm using where it's not one for one replacement of the bricks and mortar buildings on the unit, but they allow some to be vouchers, but you pushed to maximize the affordability on site. That's the kind of example I can -- I'm looking at.

And I -- I can't without sort of going back and (inaudible), I can't tell you exactly whether they have -- what they've used as the number of comparison. We've certainly pushed to say, "Yes, if the unit's been empty for a long time, it's still constructively demolished, and you are responsible for that unit."

But I think they've, you know, they've tried to work on this and have some flexibility, but they're -- but there's no pressure then if they don't have to replace 50 percent of them. I just don't --

REP. GREEN: Well, I -- I guess I'm concerned with communities when 30, 40, 50 percent vacancy rate of units, how we got there, and then if it's going to be there for so many years, what do we do to stimulate some redevelopment at the same time of protecting, you know, affordable housing folks, because, you know, I want to protect affordable housing, but I also know that communities talk about other social issues that happen when 30, 40 percent of their units are vacant?

AMY EPPLER-EPSTEIN: And I -- and I, you know, the tenants are going to want that too, and if the tenants are working with the housing authorities to try and do that, you know, if you have a tenants group jointly come in with the -- with the housing authority to say we support the housing authority to do this redevelopment. We understand it may not be all of these units, but, you know, there are other options too.

You can dedicate some of your Section 8. The housing authority could dedicate some of their Section 8 to support project-based housing offsite to be vouchers to be given --

REP. GREEN: Uh-huh.

AMY EPPLER-EPSTEIN: -- to people as replacement housing offsite, to go to HUD and say, "Give us more vouchers, you know, this is 100 units, we can only replace 50 onsite. Give us 50 vouchers to let people use offsite elsewhere in the community." And they can -- when you

have the one for one replacement law, you can have that leverage to try and make some of those other things happen.

But I haven't seen -- I don't think the housing is not getting rebuilt because of this -- this law. I think to the contrary, it's this law that has given advocates like myself the leverage to be able to go to housing authorities and say, "You better do more than you're proposing here. If you want to tear this down, you better give us more, because we've got the DECD here, and you have to get through."

And if you don't go through that, you know, they're -- I mean, we've had (inaudible) where they're looking to tear down the low income stuff and put in some mixed income, which is not a bad thing, but what about those poor low-income people who can't -- who aren't going to get into there? You've got to do something to, you know, to account for them.

And so then, we said, "Okay, you want to put mixed income here to replace it? That's fine, but then you have to do something elsewhere. You have to dedicate some vouchers to it. You have to maybe instead of 25 percent mixed income, let's make it, 50 percent for low income, or can you do --"

You know, like it's -- it's the only tool that we've got. It's really, you know, what we've got out there to push for this -- to -- to keep this housing, and -- and every unit we lose, if it's gone, it's gone. We know, you know, once that place is torn down, it's a -- it's a struggle for poor people to find places they can afford.

The subsidized housing is, I think, the only way for people who are -- people on disabilities, but people who are working, who are working low-wage jobs, and I know you've seen the studies and you're familiar with that and what -- how much it costs to live in Connecticut.

It's very hard to find places in -- in, you know, many of our communities where there's affordable housing and if -- what we have is so valuable that it just makes me cry to think of losing it. It scares me to think of -- that the committee could say, "Well, this is towards the greater good," because I don't think it is.

I think this tool of this law is the one tool we have that's been able to let us push for some real replacement that at least if they're going to demolish, you -- you can't just lose this housing.

Thank you for your time and attention. I appreciate it.

REP. BUTLER: Any other questions?

Thank you for your testimony.

AMY EPPLER-EPSTEIN: Thank you.

REP. BUTLER: Next, we're going to have David Pels.

DAVID PELS: Good afternoon. My name is David Pels. I work at Greater Hartford Legal Aid. Like the previous speaker, I also urge the committee to reject Raised Bill Number 5371.

But I'm here specifically to ask the committee to reject Raised Bill 5373, because it would radically undermine the rights of tens of

Testimony to the Housing Committee by
David Fink, Policy Director, Partnership for Strong Communities
Thursday, March 4, 2010

Representative Green, Senator Gomes, members of the Housing Committee,

I am David Fink, policy director of the Partnership for Strong Communities. We are a statewide housing policy organization that engages civic and political support to solve homelessness, create affordable housing and develop strong, vibrant communities.

I am here today to briefly comment on three bills before you.

The first, SB 321, An Act Concerning the State's Consolidated Plan for Housing and Community Development, is designed, as we understand, to allow the state's consolidated plan to offer a full blueprint for the state's coordinated housing goals, rather than continuing DECD to also have to produce a Long-Range State Housing Plan. DECD reports that data normally included in the Long-Range plan would be available in its annual report and confining blueprint for state housing policy in the consolidated plan would better focus attention on funding priorities and avoid conflicting timetables for achieving those priorities.

The Partnership is sympathetic to DECD's efforts to avoid duplication in its work and could support the change outlined in SB 321, but only if the Consolidated Plan comprehensively lays out a coordinated strategy for maximizing state and federal funds, in conjunction with CHFA, to produce housing at very low-, low- and moderate income levels, and supportive housing and housing plus services for people who are disabled, elderly and homeless.

In this era of scarce resorts, we would be the last to compel a resource-strapped agency to do work twice. But we want to ensure that nothing is lost in the effort to plan for Connecticut's many vital housing needs.

HB5371

We strongly support the second bill, SB 317, An Act Concerning Buildings Located Within the Five-Hundred-Year Floodplain. Such legislation, allowing state investment to rehabilitate existing affordable housing, will help preserve existing units at a time when the supply of affordable units is short. We believe SB302, now before the Planning and Development Committee, is a more expansive and powerful tool to accomplish that goal, but we nonetheless support SB317.

Finally, we cannot support Raised Bill 5371, an Act Concerning A Pilot Program for Affordable Housing Replacement. Allowing a replacement ratio of one new unit for each two units sold, demolished or otherwise made unavailable could severely deplete the stock of affordable units. While the criterion used in the bill might be well-meaning – allowing the 1-to-2 ratio only in municipalities where more than 10% of the housing stock is considered affordable under terms of Sect. 8-30g – it is a bad criterion. Imagine allowing two units to be destroyed for every one created in such cities as Hartford, New Haven, Bridgeport or New Britain, where the affordable units total more than 10% but where they remain in short supply. That would be a big mistake.

Thank you for the chance to testify.

Testimony of Atty. Amy Eppler-Epstein
New Haven Legal Assistance Association
426 State Street, New Haven, CT 06510
203-946-4811

In Opposition to HB 5371
"An Act Concerning Pilot Program for Affordable Housing Replacement"
March 4, 2010

I have been an attorney at New Haven Legal Assistance, specializing in housing law, for more than two decades. During that time, I have represented thousands of tenants who live in public housing in this state. Through the lives of these clients, I know how critically important it is to have public housing: housing that is affordable to very low income people, housing that will provide a place to live to people who are poor, sometimes disabled, and would most likely be homeless were it not for the shelter that public housing provides, because they could not afford housing on the private market based on their income.

Over the years, I have seen housing authorities throughout New Haven county seek to demolish some of their public housing, for a variety of reasons: sometimes laudable ones, like the desire to replace old, dilapidated buildings with new and improved housing for poor people; other times for much more disturbing reasons, like a desire to drive poor people out of a particular neighborhood or town.

I have taken the time to come here today, because the proposal in HB 5371, to allow housing authorities to demolish public housing and replace **only half** of the demolished units, is a frightening step backwards in the efforts to create and preserve affordable housing in this state. It seriously weakens one of the few legal tools advocates have at their disposal to ensure the preservation of our existing supply of affordable housing. Anyone who spends a minute comparing the income of a minimum wage worker with the price of housing in this state, or looks at the growing number of individuals and families living in our homeless shelters, will have no doubt that **Connecticut needs more, not less, affordable housing**; we cannot afford to let housing authorities demolish those bricks and mortar resources that we have, and only require them to replace **half** of the apartments they demolish. Once those hard units of housing are torn down, unless the law requires them to be replaced, they are lost forever.

In the past 5 years, I have represented three different tenant associations in their negotiations with housing authorities regarding proposed demolition of public housing. In those negotiations, I have become well aware of how difficult it is to find the funds to rehabilitate or rebuild public housing. I have seen how important CGS 8-64a is to tenants: the DECD hearing process, and the statute's requirements that housing authorities consult with tenants and allow for their participation, has given tenants some voice, and has forced some housing authorities to include tenants in their planning process and negotiate with the tenants and their representatives. In one case in which I was involved, it was only because of this DECD approval

process that the tenants were able to require the housing authority to revise its plan, and increase the number of low income affordable replacement units in its proposed plan for redevelopment. I have also seen the limitations of the act, particularly insofar as it allows housing authorities to replace actual "bricks and mortar" units of public housing with "tenant-based rental subsidies." In many communities, where there is a limited supply of rental housing, allowing the demolition of public housing and replacing such units with a rental subsidy in effect becomes a requirement that the tenants move out of town.

I am not unaware of the financial difficulties facing many housing authorities, or the difficulties in finding funding to rehabilitate public housing or build new subsidized housing that is affordable to low income people. But if my experience over the past 5 years shows me anything, it shows me that it can be done; but it will not be done, unless it is legally required.

Our existing, limited supply of low income public housing is too valuable of a resource to allow it to be destroyed without being fully replaced. I urge you to reject HB 5371.

Legal Assistance Resource Center
◆of Connecticut, Inc.◆

44 Capitol Avenue, Suite 301 ◆ Hartford, Connecticut 06106
(860) 278-5688 x203 ◆ (860) 836-6355 cell ◆ (860) 278-2957 fax ◆ RPodolsky@larcc.org

H.B. 5371 -- Demolition of public housing

Housing Committee public hearing -- March 4, 2010
Testimony of Raphael L. Podolsky

Recommended Committee action: NO ACTION

We oppose this bill because it will result in the loss, without full replacement, of essential parts of Connecticut's public housing stock. Connecticut in recent years has lost to demolition a larger percentage of its public housing than any other state. Contrary to its title, this bill is not about "affordable housing replacement" but is instead solely about the reduction of low-income public housing units. Connecticut's public housing stock is an incredibly important resource for the lowest income residents of this state. Any loss of public housing units is permanent and causes significant damage to the housing market for those who are very poor. It is essential that efforts to modernize public housing not result in a net loss of the number of units in the local housing market which are available to very low income households.

Since 1989, Connecticut law (C.G.S. 8-64a) has prohibited housing authorities from demolishing or selling off their public housing without fully replacing it, unless the plan meets certain standards and is approved by DECD after a public hearing. One of those standards for demolition without replacement is that there be an adequate supply of low or moderate rental housing in the community, a condition that few municipalities would meet. This is because public housing tends to serve families of the lowest income who can least afford to pay rents in the private market. The existing statute does not preclude modernizing public housing, nor does it require that replacement units be located on the same site as the housing that is being replaced. All sorts of creative modernization solutions exist, from rehabilitation of existing units on-site to mixing incomes on-site and generating the balance of units elsewhere in the town. The essential purpose of C.G.S. 8-64a, however, is to assure that the number of low-income units in the town's housing market will, after any demolition or sale of public housing units, be no less than before demolition or sale. Indeed, the Stamford Housing Authority, which has been the most active developer of new public housing in Connecticut, has built that housing under a Stamford municipal ordinance that explicitly requires one-for-one replacement of lost units.

H.B. 5371, however, moves in exactly the wrong direction. It would suspend 8-64a for three years for the 31 towns exempt from the Affordable Housing Appeals law. This effectively exempts nearly all public housing in the state from C.G.S. 8-64a, because most public housing is located in those very towns. Once demolished without a replacement plan, such units will never be replaced, since the key to replacement is including funding for replacement in the demolition plan itself, much as happens with the federal HOPE VI revitalization program. H.B. 5371 will seriously damage the ability of low-income families to find housing they can afford. It should be rejected.

(continued on reverse side.....)

If any change is to be made to 8-64a, it should be to restore clear one-for-one replacement language similar to what was in this statute before 1996. To accomplish that, all new language in the bill should be removed and lines 24-30 of the bill should be amended as follows:

> The commissioner shall [consider the extent to which the housing] not grant such approval unless the commissioner also finds that all dwelling units which are to be sold, leased, transferred or destroyed will be replaced with at least an equal number of units available for rental by persons with the income levels as the households which most recently occupied such sold, leased, transferred or destroyed units. [in ways] which replacement units may include[, but need not be limited to,] newly constructed housing, rehabilitation of housing which is abandoned or has been vacant for at least one year, or new federal, state or local [tenant-based or] project-based rental subsidies that are in addition to and not in place of any previously authorized rental subsidies. All of the replacement units need not be on the same site as the sold, leased, transferred or destroyed units.

March 4, 2010

Committee on Housing
State of Connecticut General Assembly
Room 011, Capitol Building
Hartford, CT 06106

RE: Testimony In Favor of Bill No. 5371, AN ACT CONCERNING A PILOT PROGRAM FOR AFFORDABLE HOUSING REPLACEMENT

Dear Committee Members:

I am submitting this written testimony in favor of the above referenced bill which will provide greater flexibility and more options for the East Hartford Housing Authority in the ownership, management, and disposition of King Court, one of its state-financed moderate income public housing developments. At the same time it will protect the interest of current tenants by providing them with an opportunity to be an active participant in the planning phase, and it will provide them with replacement housing in the form of available public housing units at another site in town, or receipt of a tenant-based rental voucher. Lastly, it will protect the interest of the State as a financer of affordable housing.

The East Hartford Housing Authority owns and operates the 80-unit moderate income housing development financed by the State Department of Economic and Community Development (DECD) and now under the administration of the Connecticut Housing Finance Authority (CHFA). This project was developed as Worker housing for employees of Pratt & Whitney Aircraft and because worker wages were sufficiently high to cover the base rents, the project financing was structured without project based rental subsidies.

Over time, those workers' income levels increased and provided them with other housing options including private rentals and home ownership. Unfortunately, due to the lack of project based rental subsidies, the Housing Authority found itself in a position where low-income families did not qualify for the vacant units. At the same time, the inventory of privately owned rental housing units in town increased substantially and thus provided moderate income families with more housing choice. Consequently, the vacancy levels at this project began to rise. Currently, 36 of the 80 units are vacant and only 5 of them are ready for occupancy.

The high vacancy rate has resulted in a drop in rental revenue and has dramatically hindered the Housing Authority's ability to repair or complete capital improvements. The Authority has repeatedly sought funding from DECD for capital improvements but has been told that no funds are available. In the meantime, the units continue to deteriorate and some have been vandalized.

The Housing Authority has been negotiating a restructuring and re-financing of the project with CHFA, and it would include funds to complete necessary improvements, however, without the availability of rental subsidies this project would be a financial risk for the Authority. Currently, there are no subsidies available, and given the reductions in the budgets of the state agencies due to the large state government budget deficit, no new subsidies are likely to be allocated in the near future.

The Housing Authority was approached by representatives of Goodwin College, which is in close proximity to King Court, who were interested in purchasing some of the vacant buildings for conversion to student housing for individuals and families with low-incomes. Unfortunately, when this proposition was presented to the project manager, who is based at DECD, they were informed that it could not be approved unless the Housing Authority complied with the 1:1 unit replacement requirement. The Authority does not have the available land or the financing to construct new replacement units.

This proposed bill provides for the protection of the interests of all the parties involved. Favorable action on your part and passage by the General Assembly will enable the East Hartford Housing Authority to sell some of the vacant buildings at King Court to Goodwin College for use as student housing and targeting those that are low-income households. This is a win-win-win resolution.

Respectfully submitted,

Stanley G. de Mello
140 Leverich Drive
East Hartford, CT 06108
Tel. 860.748-7851

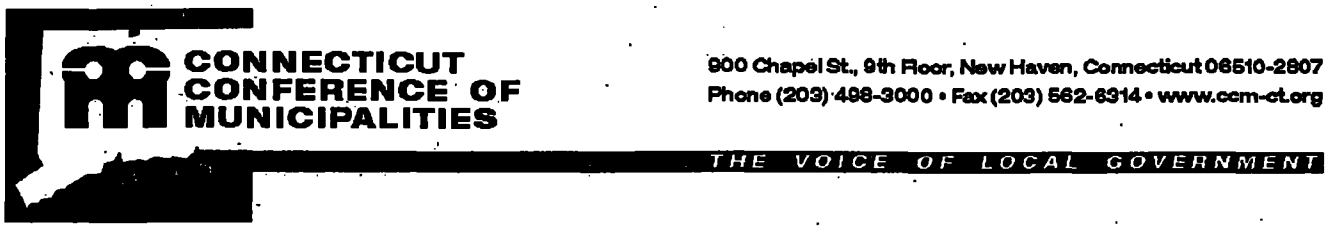

900 Chapel St., 9th Floor, New Haven, Connecticut 06510-2807
Phone (203) 498-3000 • Fax (203) 562-6314 • www.ccm-ct.org

TESTIMONY

of the

CONNECTICUT CONFERENCE OF MUNICIPALITIES

to the

HOUSING COMMITTEE

March 4, 2010

CCM is Connecticut's statewide association of towns and cities and the voice of local government - your partners in governing Connecticut. Our members represent over 90% of Connecticut's population. We appreciate this opportunity to testify before you on issues of concern to towns and cities.

Raised House Bill 5371, ***"An Act Concerning a PILOT Program for Affordable Housing Replacement."***

While CCM appreciates the intent behind this proposal, it may be more productive to give the Commissioner flexibility to determine if the trade off should be 2 sold-1preserved, 2 sold-2-preserved etc. Such determinations could be made according to the particulars of the community.

##

If you have any questions, please contact Donna Hamzy, Legislative Associate
via email dhamzy@ccm-ct.org or via phone (203) 498-3000.

ghla
Greater Hartford Legal Aid

To: Committee on Housing
From: David A. Pels
Re: Raised Bill No. 5371

I urge the Committee on Housing to reject Raised Bill No. 5371 because it would alter the current crucial requirements for the replacement of demolished public housing.

Under current law the consent of the Commissioner of the Department of Economic and Community Development (DECD) is needed for the demolition of public housing. DECD currently can grant consent under limited conditions designed to ensure that: the demolition is in the best interests of the municipality; there is an adequate supply of low or moderate income housing; residents are involved in planning and; displaced persons receive comparable housing and relocation assistance. All of these protections would be replaced by a three year "pilot" program that only requires the replacement of one unit for every two that are demolished.

I represented the tenants at Westbrook Village and Bowles Park in Hartford during the latest attempt to redevelop those premises. The tenants were always very clear that in order for them to support redevelopment they had to be involved in the planning process; all displaced residents had to receive comparable replacement housing and the lost units had to be fully replaced.

The adoption of this bill would lead to a lower supply of housing for low and moderate income persons at a time when there is no evidence to suggest the need for such housing has decreased. It would also eliminate the important role that the residents now play in the development of housing in their communities.

Raised Bill No. 5371 should be rejected.

Greater Hartford Legal Aid, Inc.
999 Asylum Avenue, 3Fl. Hartford, CT 06105-2465 • Tel: 860. 541. 5000 • Fax: 860. 541.5050 • TTY: 860. 541.5069 • www.ghla.org

United Way

ALLEY PROVIDES REAR OR SIDE ENTRY

Visitability Standards

The rest of this booklet provides a summary of the requirements for visitable dwelling units in ICC/ANSI A117.1 (2009). The ICC/ANSI A117.1 Standard on Accessible and Usable Buildings and Facilities is the consensus standard in the U.S. for defining the details of accessible construction and is referenced by most building codes in the country. In 2008 the ICC committee that develops the A117 Standard developed a new section with technical design criteria for visitability based on a document developed by disability rights advocates for the Inclusive Home Design Act. Referred to as Type C units, the section can be referenced by future visitability laws and programs, thus promoting uniformity and aiding in their interpretation.

Since the standards are developed for use in a legal context, they include many provisions that heretofore have not been included in previous visitability laws to address potential problems with enforcement. For example, one of the issues that needed to be addressed was to clarify what minimum facilities in the home have to be on the accessible level, e.g. kitchen equipment, amount of living space, etc.

This document includes a summary of the Type C (visitable) requirements. Numbers following headings correspond to sections in the standard. Please note that the requirements of the standard are simplified here to provide a concise and easy to understand list of features. In particular, only the key cross-references to other parts of the Standard have been included. Consult the Standard for the actual wording and more detailed information*.

* Note: The IDEA Center does not warrant the completeness or accuracy of this document nor how it may be interpreted by building or planning officials.

ICC Type C Units

While the concept of visitability puts a high priority on a zero step entrance, wide interior clearances, and an accessible bathroom, most visitability laws have included a few additional features. Similarly, the Type C units contain technical criteria for six features: no-step entrances, wider doorways, access to a half-bath on the main floor, reinforcement in bathroom walls for future grab bar installation, maneuvering space in food preparation facilities if provided on the floor served by the zero step entrance, and light switches and electrical outlets within comfortable reach for all.

Unit Entrance (1006.2)

At least one unit entrance shall be on a circulation path complying with Section 1006.5 (Circulation Path) from a public street or sidewalk, a dwelling unit driveway, or a garage.

Connected & Interior Spaces (1006.3 & 1006.4)

A circulation path complying with Section 1006.5 (Circulation Path) shall connect the unit entrance located on the circulation path to the following spaces:

a. An entrance level toilet room or bathroom complying with Section 1006.6 (Toilet Room or Bathroom).

b. One additional habitable space with an area 70 square feet [6.5 sq. m] minimum.

c. When provided on the entrance level, a food preparation area complying with Section 1006.7 (Food Preparation Areas).

Exception: A toilet room or bathroom shall not be required in units with less than 120 square feet [11 sq. m] of habitable space on the entrance level.

Circulation Path (1006.5)

Components (1006.5.1): The circulation path shall include one or more of the following elements: Walking surfaces with a slope not steeper than 1:20, doors and doorways, ramps, compliant elevators (Section 407-409), and compliant platform lifts (Section 410).

Walking Surfaces (1006.5.2) and Thresholds (1006.5.3.2): Thresholds and slopes not steeper than 1:20 shall comply with Section 303 (Changes in Level). Section 303.2 permits abrupt changes in level up to ¼ in. [6.4 mm]. Section 303.3 states, "Changes in level greater than ¼ in. [6.4 mm] in height and less than ½ in. [13 mm] maximum in height shall be beveled with a slope no greater than 1:2. Changes in level greater than ½ in. [13 mm] in height shall be ramped and comply with Section 405 (Ramps) or 406 (Curb Ramps)."

Exception: Thresholds at exterior sliding doors shall be permitted to be ¾ inch [19 mm] maximum in height, provided they are beveled with a slope not steeper than 1:2.

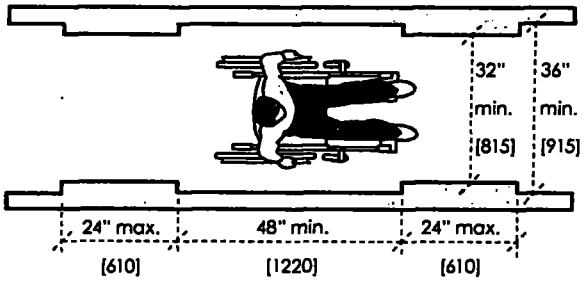

WALKING SURFACES CLEAR WIDTH

Hallways and corridors are at least 36 in. clear with allowable pinch points of 32 in. clear width for no longer than 24 inches.

Clear Width (1006.5.2.1): The clear width of the circulation path shall comply with Section 403.5 (Clear Width) which states, hallways and corridors must have at least 36 in. [915 mm] clear width.

Exception: Pinch points (short, narrower areas) are allowed to be 32 in. [815 mm] clear for a distance of 24 in. [610 mm] maximum (see figure).

Doors and Doorways (1006.5.3.1): Swinging doors shall have a clear opening of 31 ¾ in. [810 mm] minimum measured from the jamb to the inside face of the door and stop with the door open at 90 degrees. Sliding and folding doors shall be measured from the jamb to the inside edge of the door in the open position. Automated doors may be used if they meet all applicable code requirements, including the requirements in ICC/ANSI A117.1.

Exception: Doorways to closets with 15 SF [1.4 sq. m] space maximum.

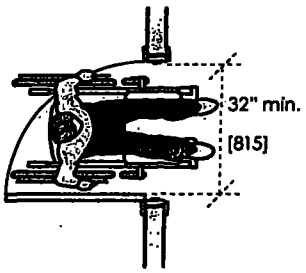

VISITABLE HINGED DOOR

Hinged doors – 31 3/4 in. min. clear width measured from the jamb to the inside face of the door when held open at 90 degrees.

Ramps (1006.5.4): Ramps shall comply with Section 405 (Ramps).

Exception: Handrails, intermediate landings and edge protection are not required where the sides of ramp runs have a vertical drop-off of ½ inch [13 mm] maximum within 10 inches [255 mm] horizontally of a ramp run.

Toilet Room or Bathroom (1006.6)

Toilet rooms or bathrooms covered by Section 1006.4 (Interior Spaces) shall include the following features:

a. A lavatory and a toilet.

b. Reinforcement and space clearances for the future installation of grab bars at toilets.

Note: If more than one bathroom is provided on the entry floor, reinforcement is required in at least one full bathroom on that floor.

c. The wall reinforced for the future installation of grab bars shall be 18 inches [455 mm] from the centerline of the toilet.

d. Lavatories must be at least 15 inches [380 mm] from the centerline of the toilet.

e. Space clearances at the toilet must meet or exceed the minimum requirements for at least one of the following sections:

"Parallel Approach" (1004.11.3.1.2.1):

i. Measured from the wall behind the toilet, there shall be a minimum clear space of 56 inches [1420 mm].

ii. Measured from the wall designated for the future installation of grab bars, there shall be a minimum clear space of 48 inches [1220 mm].

iii. Vanities or lavatories beside the toilet may overlap required space clearances.

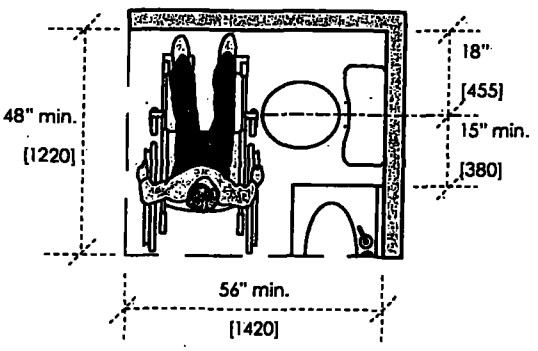

PARALLEL APPROACH

"Forward Approach" (1004.11.3.1.2.2):

i. Measured from the wall behind the toilet, there shall be a minimum clear space of 66 inches [1680 mm].

ii. Measured from the wall designated for the future installation of grab bars, there shall be a minimum clear space of 48 inches [1220 mm].

iii. Vanities or lavatories beside the toilet may overlap required space clearances.

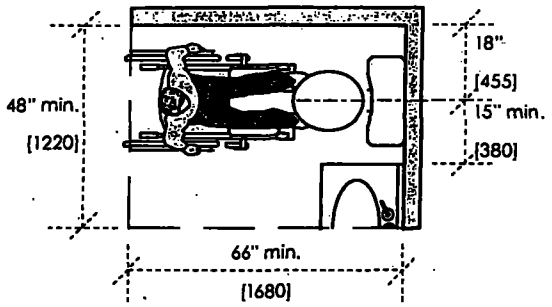

FORWARD APPROACH

"Parallel or Forward Approach" (1004.11.3.1.2.3):

i. Measured from the wall behind the toilet, there shall be a minimum clear space of 56 inches [1420 mm].

ii. Measured from the centerline of the toilet, there shall be a minimum clear space of 42 inches [1065 mm].

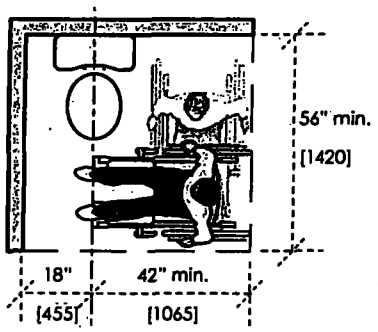

PARALLEL OR FORWARD APPROACH

Food Preparation Areas (1006.7)

a. When provided on the entrance level, the food preparation area shall include a sink, a cooking appliance, and a refrigerator.

b. Clearances between all opposing base cabinets, counter tops, appliances or walls within the food preparation area shall be 40 inches [1015 mm] minimum.

Exception: Spaces that do not have a cook-top or conventional range shall be permitted to have a minimum clearance of 36 inches [915 mm] wide.

Lighting Controls & Receptacle Outlets (1006.8)

The centerline of receptacle outlets and operable parts of lighting controls located a minimum of 15 inches [380 mm] and a maximum of 48 inches [1220 mm] above the finished floor.

Exception: The following shall not be required to comply with Section 1006.8:

1. *Receptacle outlets serving a dedicated use (e.g. outlets intended for refrigerators or laundry equipment).*
2. *Controls mounted on ceiling fans and ceiling lights*
3. *Floor receptacle outlets*
4. *Lighting controls and receptacle outlets over countertops*

This booklet includes excerpts from the forthcoming book:

Inclusive Housing: A Pattern Book by Edward Steinfeld & Jonathan White

This book is a resource for designing communities to accommodate social diversity and provide equitable opportunities for all residents, or, inclusive design. It focuses on design of housing to provide accessibility to people with disabilities and, aging in place, while increasing convenience and safety for all residents. This book is one small effort toward affecting a change in design practices. This is the heart of the inclusive design idea – to transform the perception of difference as something about "them" to an understanding that design for diversity benefits all of us.

***Inclusive Housing: A Pattern Book* will be available for purchase in Fall of 2009. Watch our website for an announcement on the exact release date.**

Concrete Change is the organization that brought the concept of visitability to the U.S. and assists communities and professionals seeking to introduce visitability laws. For additional information on visitability, see Concrete Change at **www.concretechange.org** or call **+1 (404) 378.7455**.

The American Association of Retired People (AARP) has taken a leadership role in promoting design for aging in place. They recently published a white paper on visitability, written by the IDEA Center and Concrete Change available at **http://www.aarp.org/research/housing-mobility/accessibility/2008_14_access.html**. See **www.aarp.org/research/housing-mobility**, or call **+1 (888) OUR.AARP**.

The Inclusive Home Design Act (H.R. 1408) was re-introduced to Congress by Rep. Jan Schakowsky (D-IL) in March 2009 and is supported by many members of Congress. For new homes built with federal assistance, the Act would supplement the existing required percentage of fully accessible units with visitability in all the other units. For the latest information on the bill's progress, please contact Rep. Schakowsky's Communications Director, Trevor Kincaid, at **+1 (202) 226.6898**.

NIDRR Funding provided by the U.S. Department of Education, National Institute on Disability and Rehabilitation Research

---

Copyright 2009:

IDeA

Center for Inclusive Design & Environmental Access
378 Hayes Hall, University at Buffalo
3435 Main Street
Buffalo, NY 14214-3087

TEL: +1 (716) 829.3485 x 329
TTY: +1 (716) 829.3758
Fax: +1 (716) 829.3861
Email: idea@ap.buffalo.edu
Web: www.ap.buffalo.edu/idea

An independent, nonpartisan office of the Connecticut General Assembly

Testimony of

Julia Evans Starr, Executive Director
Connecticut Commission on Aging

House Bill 5371: An Act Concerning Accessible Housing
Joint Committee on Housing
March 4, 2010

Thank you for this opportunity to comment today on this issue of import to individuals across the state, as well as to the state budget.

As you know, the Connecticut Commission on Aging (CoA) is an independent, nonpartisan state agency that is part of the legislative branch of government. We are devoted to preparing our state for a burgeoning aging population while promoting policies that enhance the lives of the present and future generations of older adults. For sixteen years, the Commission has served as an effective leader in statewide efforts to promote choice, independence and dignity for Connecticut's older adults and persons with disabilities.

Three years ago, the Commission on Aging was pleased to work with the UConn Health Center, Center on Aging on the state's Long-Term Care Needs Assessment, a study which has been cited as one of the nation's most comprehensive. That study found that almost 80% of Connecticut residents would prefer to remain in their homes as they age. Over 70% of respondents recognized that they may need home modifications, such as wheelchair ramps, in order to remain in those homes.

Follow-up data from the Needs Assessment also support the fact that individuals can receive services in their homes for about half the cost to the state of being in a nursing home. Keeping people in their homes as they age is a clear "win-win" for the state: it is the rare instance when saving money actually provides individuals with a higher quality of life.

However, the Needs Assessment also found that the lack of available, accessible, affordable housing is an obstacle to people remaining in their communities as they age. More recently, it has become apparent that the movement to transfer people out of nursing homes and back into the community (through the Money Follows the Person program) is also hampered by this lack of appropriate housing. In fact, over 300 nursing home residents have completed every step of the process to be transitioned back to the community; by far, the largest reason for the delay in transition is a lack of appropriate housing.

The Commission on Aging asks this Committee to consider the bill before you as one step in the critical process of providing more accessible, appropriate housing for individuals in our state. While this proposal does not address existing housing stock, it could change the way our state thinks about new housing proposals moving forward. We support the Committee's dedication to finding a balanced approach to this issue and look forward to working with you. Thank you.

State Capitol • 210 Capitol Avenue • Hartford, CT 06106
Phone: 860.240.5200 • Website www.cga.ct.gov/coa
LTC website: www.ct.gov/longtermcare

Connecticut Chapter
National Association of Housing and Redevelopment Officials
P. O. Box 822
Canton, CT 06019
Phone: (860) 508-4896
www.conn-nahro.org

Testimony of
Neil J. Griffin Jr.
Vice President of Housing and Legislation
Submitted to Housing Committee
March 4, 2010

Good-afternoon my name is Neil Griffin and I am the Vice President of Housing & Legislation for Conn-NAHRO and the Executive Director of the Glastonbury Housing Authority. Conn-NAHRO represents over 112 Connecticut housing authorities and other non-profit and community development member agencies. Member agencies have the responsibility of effectively managing or administering housing for 150,000 families/individuals and over 62,000 housing units in Connecticut.

Speaking on behalf of Conn-NAHRO's Executive Board and member agencies I would like to express support for: SB 317 and HB5371

I would also like to express Conn-NAHRO's opposition to SB320, SB318 and HB5373.

SB 317 An Act Concerning Building Located Within the Five-Hundred Year Floodplain

Conn-NAHRO supports the Housing Committee's efforts to preserve Connecticut's low income housing that was developed within the 500 Year Flood Plain. The proposed exemption will allow existing low income and affordable properties not only to access State funds but federal funds administered by the State, thereby allowing the properties to fund the much needed capital improvements.

We urge the Committee to explore allowing the exemption to any unit on the most current Affordable Housing Appeals List. By changing the language on line 121 from "state housing loan portfolio" to "part of the most current affordable housing appeals list" the Committee will allow for the preservation of a full range of affordable housing, not just the state housing loan portfolio. This would include DECD, CHFA, HUD and Rural Development financed low income and affordable units.

Finally we believe the language on lines 122 – 124 that states "provided such units were built in compliance with the flood map in place at the time of construction" could cause some confusion. Since the units were constructed and building permits were issued at the time of construction the properties would have been in compliance with all zoning requirements including flood plain requirements that were in effect at the time of construction. Therefore we would urge the Committee to consider removing this language.

HB 5371 An Act Concerning A PILOT Program for Affordable Housing Replacement

Conn-NAHRO supports HB5371. The concept of allowing properties to be redeveloped without one for one replacement supports the option of redeveloping properties as mixed income properties where some units would be at market rate and others would remain low and moderate income units. Income mixing would take a limited percentage of the units to be rented at market rate thereby reducing the subsidy needs for the property. This would achieve two desired outcomes at one time, the de-concentration of poverty, sought by HUD, and the reduction on subsidy demands sought by all funding sources.

Understandably there is always concern for the loss of a low income or a moderate income housing unit; however if there is a flat out requirement of one for one replacement it could lead to a failure for many plans to rehabilitate dilapidated housing. At a time when property owners are required to leveraging many sources of financing and a there is a clear need to lessen the subsidy demand of each property HB 5371 is a concept worthy of pursuit.

HB 5373 An Act Concerning Establishing Residency for Tenants

Conn-NAHRO opposes the language in HB 5373. While we agree the purpose of the bill is a well intended one, without some serious changes to the summary process statutes this bill as proposed would complicate evictions for unauthorized occupants significantly.

We do believe the bill should provide some better clarification, therefore we respectfully submit our comments for your consideration.

Lines 1-3 should be rewritten in a manner not to obstruct an eviction for a situation where an existing tenant adds an unauthorized occupant. By requiring an unauthorized occupant to be on the lease to establish residency it creates a circular logic. This will complicate an eviction by making it more difficult to prove the person has established residence in such unit if it can be argued that they have not established residency since they are not on the lease. We would recommend something to the effect of "*Occupations by a person of a dwelling unit shall be insufficient to provide the right or privilege to occupy such premise unless (1)...*"

Line 4 should probably say, "*unless... (2) such person qualifies as a dependent under the Internal Revenue Code.*" and should also add: "*...or a natural child of a tenant of such unit under the age of majority.*"

Line 5-6 his should probably say, "*Any person who occupies a dwelling unit but does not establish residence pursuant to (1) or (2) above shall be considered, for the purposes of CGS §47a-23(a)(2) and (3), someone who never had a right or privilege to occupy such premises; or who may have originally had the right or privilege to occupy such premises but such right or privilege has terminated.*"

SB 320 An Act Concerning The Selection of Tenant Commissioners

Conn-NAHRO opposes SB 320. Presently the Connecticut General Statutes provide a mechanism that allows for recommendations to be submitted by tenant associations. Furthermore the burden of oversight of the Authority rests with the appointing municipal authority. To remove their ability to select members of the commission, for which they have the ultimate oversight of, removes a core principal of accountability. Finally the bill creates an unfunded mandate; the cost of holding an election would ultimately be incurred by the Authority or municipality.

Housing Committee
Public Hearing
March 4, 2010

Testimony of Jeffrey Freiser,
Executive Director, Connecticut Housing Coalition

Support:
S.B. 317 - AAC BUILDINGS LOCATED WITHIN THE FIVE-HUNDRED-YEAR FLOODPLAIN.
S.B. 320 - AAC THE SELECTION OF TENANT COMMISSIONERS.
H.B. 5369 - AAC FORECLOSURE MEDIATION.
H.B. 5370 - AN ACT AUTHORIZING BONDS OF THE STATE FOR CAPITAL IMPROVEMENTS OF MODERATE RENTAL HOUSING OPERATED BY THE HARTFORD HOUSING AUTHORITY.
H.B. No. 5372 - AAC ACCESSIBLE HOUSING.
H.B. 5374 - AAC PROMOTING AND SUSTAINING AFFORDABLE HOUSING IN CONNECTICUT.
H.B. 5397 - AAC REAL ESTATE LICENSING FOR NONPROFIT HOUSING CORPORATIONS.

Conditional support – if amended:
S.B. 318 - AAC CHANGES TO CERTAIN HOUSING STATUTES.

Oppose:
H.B. 5371 - AAC A PILOT PROGRAM FOR AFFORDABLE HOUSING REPLACEMENT.
H.B. 5373 - AAC ESTABLISHING RESIDENCY FOR TENANTS.

The Connecticut Housing Coalition represents the broad, vibrant network of community-based affordable housing activity across the state. Our more than 250 member organizations include nonprofit developers, human service agencies, resident associations, and diverse other housing practitioners and advocates. Founded in 1981, the Coalition works to expand housing opportunity and to increase the quantity and quality of affordable housing in Connecticut.

▶ S.B. 320 – AAC The Selection of Tenant Commissioners

Each housing authority in the state is governed by a board of commissioners, usually comprised of five members, although the largest housing authorities (with more than 3000 units) may have seven-member boards. C.G.S. Section 8-41 requires that one commissioner of a five-member board be a tenant of the housing authority, and that two commissioners of a seven-member board be tenants.

All across Connecticut, residents of public housing are actively involved in making their communities better places to live. They care deeply and work hard to improve the conditions of public housing. They want their children to live in an environment that is safe and decent. And they expect that a tenant who is serving on the housing authority's board of commissioners will truly provide a tenant's voice, offering the tenants' perspective in the deliberations of the local

30 Jordan Lane, Wethersfield, CT 06109 • phone: 860.563.2943 • fax: 860.529.5176 • info@ct-housing.org • www.ct-housing.org

▶ H.B. 5371 – AAC A Pilot Program for Affordable Housing Replacement

We strongly oppose H.B. 5371, which would allow the demolition of 50% of the public housing stock in up to 31 municipalities, including our large cities. The bill would gut C.G.S. Section 8-64a, which requires the DECD Commissioner to conduct a careful review and assure that specific standards are met before approving the sale or destruction of public housing.

Certainly, Connecticut's affordable housing needs remain severe. H.B. 5371 would permit this devastating loss of public housing in any municipality that would continue to meet the 10% level of assisted housing as defined in Section 8-30g. But affordable housing remains a precious resource even in these cities and towns. Even if 10% of a municipality's housing is assisted, then 90% have no rent or sale price restrictions, and may be unaffordable now or anytime in the future. Please reject H.B. 5371, which moves us dramatically in the wrong direction in our efforts to promote affordable housing.

▶ H.B. 5373 – AAC Establishing Residency for Tenants

We urge rejection of H.B. 5373, which would deprive tens of thousands of tenants of their basic legal protections. We understand that the intent of the bill is to deal with "guests" who are no longer welcome. But as drafted, H.B. 5373 would take away tenants' rights from anyone whose name is not on a written lease or who is not a dependent of someone named on the lease. In Connecticut, countless tenants – particularly low-income tenants – live in apartments with month-to-month oral leases. Spouses and domestic partners may also not have their names on a lease. H.B. 5373 would make all of these tenants subject to the immediate removal or arrest by police at the whim of a landlord.

▶ S.B. 318 – AAC Changes to Certain Housing Statutes

Section 5 of S.B. 318 would make for-profit developers eligible for assistance from DECD's Pre-development Loan Program. The apparent goal is to incentivize profit-motivated companies to build affordable housing. If this were a period of growing state resources, the creation of a new incentive might make sense. But we must recognize that this is a time of reduced resources, and that nonprofits are the ones who build housing that serves those with the lowest incomes and greatest needs in the most difficult settings. In our market system based on the principle of "risk-for-profit," for-profit developers are expected to put their own working capital at risk in expending pre-development costs. In a period when nonprofits are desperate for financing to carry out their vital work, we cannot support the diversion of scarce housing resources from nonprofits to for-profits.

The other provisions of SB 318 are valuable, and we would be pleased to support the bill if Section 5 were deleted.

Attachment: Proposed substitute language for S.B. 320